CHASSIS, MAIN FRAME AND SKID PLATES - Z26S4D92AN/AH/BN/BH (C750242)

2026 RZR - RZR PRO S4 ULTIMATE (R01) - Z26S4D92AN/AH/BN/BH

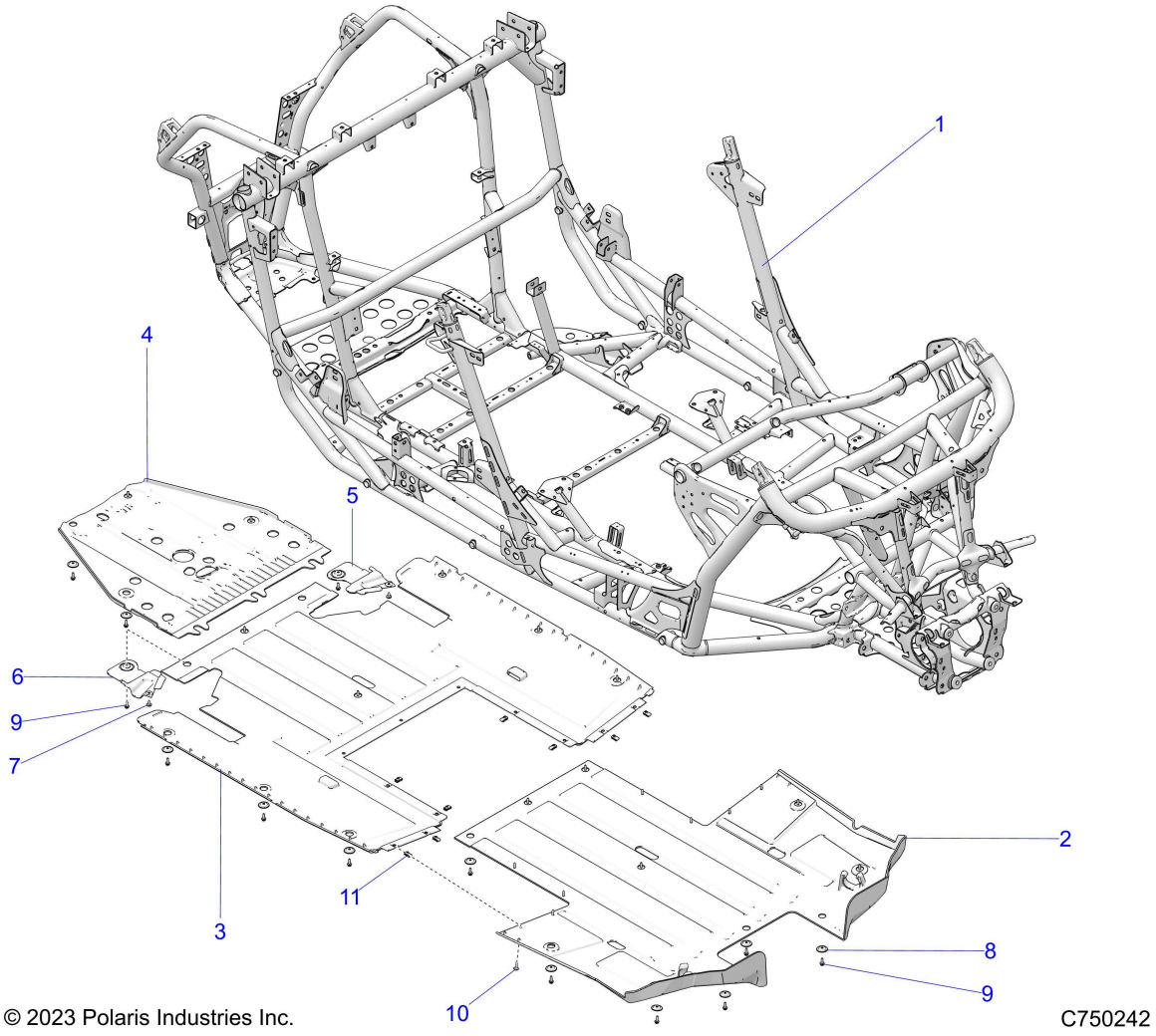

Reference #	*Part#*	*Description*	*Quantity*
1	1028548-458	WELD-MAINFRAME,RZR,74,T,MP,BLK	1
2	5455706-070	PLATE-SKID,FRONT,MP,RTD,BLK	1
3	5456711-070	PLATE-SKID,MID,MP,ROUTER,BLK	1
4	5456082-070	PLATE-SKID,REAR,BLK	1
5	5456792	PLUG-SKID PLATE,LH	1
6	5456793	PLUG-SKID PLATE,RH	1
7	7518936	SCR-M6X1X16 TR/TX-M	2
8	7556065	WASHER-SKID PLATE	23
9	7518529	SCR-M6X1.0X20,HXHD,FLG,TDFM,BK	25
10	7519650	SCR-TXTH-M6X1.0X25 ZFB	8
11	7081305	CLIP-U SPEED NUT	8

Copyright 1996-2026 Polaris Industries U.S.A All rights reserved.